Oxford Cambridge and RSA

Wednesday 18 June 2025 – Morning

GCSE (9–1) Design and Technology

J310/01 Principles of Design and Technology

Time allowed: 2 hours

You must have:
- the Insert (inside this document)

You can use:
- a scientific calculator
- a ruler (cm/mm)
- geometrical instruments

Please write clearly in black ink. **Do not write in the barcodes.**

Centre number | | | | | | Candidate number | | | | |

First name(s) _____

Last name _____

INSTRUCTIONS
- Use black ink. You can use an HB pencil, but only for graphs and diagrams.
- Write your answer to each question in the space provided. If you need extra space use the lined pages at the end of this booklet. The question numbers must be clearly shown.
- Answer **all** the questions.
- Use the Insert to answer the questions in Section B.
- Where appropriate, your answer should be supported with working. Marks might be given for using a correct method, even if your answer is wrong.

INFORMATION
- The total mark for this paper is **100**.
- The marks for each question are shown in brackets **[ ]**.
- Quality of extended response will be assessed in questions marked with an asterisk (*).
- This document has **24** pages.

ADVICE
- Read each question carefully before you start your answer.

© OCR 2025 [603/0663/4]
DC (ST/CT/SG) 353786/5
OCR is an exempt Charity

SECTION A

1 A pair of sunglasses and its case are shown below.

(a) The frame of the sunglasses is made from nylon, a thermopolymer.

(i) Give **two** reasons why a thermopolymer is a suitable material for the frame.

1 .....

.....

2 .....

.....

[2]

(ii) The sunglasses case is made from a synthetic woven fabric.

Give **one** reason why synthetic woven fabric is a suitable choice for the case.

..... **[1]**

(b) The sunglasses case uses standard components such as the zip and carabiner clip.

Give **one** reason why standard components are used in products.

.....

..... **[1]**

© OCR 2025

(c) A photochromic polymer is a smart material used to darken the lenses of the sunglasses in sunlight.

Identify **two** other smart or modern materials that could be used in the sunglasses and describe what they would be used for.

Smart or modern material .....

Description .....

.....

Smart or modern material .....

Description .....

.....

[4]

(d) Describe **two** methods of testing that could be used to assess the function of the sunglasses.

1 .....

.....

.....

2 .....

.....

.....

[4]

© OCR 2025

(e)* The designer of the sunglasses has been influenced by fashion and trends.

Discuss the importance of considering fashion and trends when designing products.

To support your answer refer to products that you are familiar with.

.....

.....

.....

.....

.....

.....

.....

.....

.....

.....

.....

.....

.....

.....

.....

.....

.....

.....

.....

.....

..... **[8]**

© OCR 2025

2 A display board to encourage people to keep the beach clean is shown below.

Display board

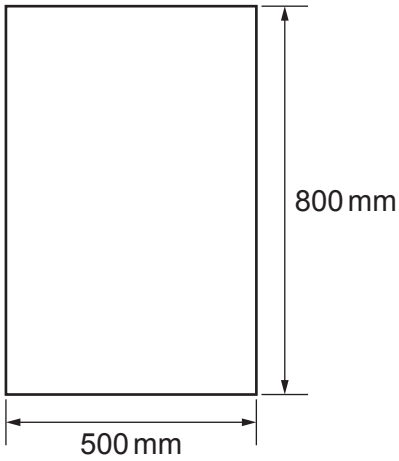

(a) Calculate the area of the front of the display board.

Area ..... mm^2 **[1]**

© OCR 2025

(b) The front and side view of the display board are shown below.

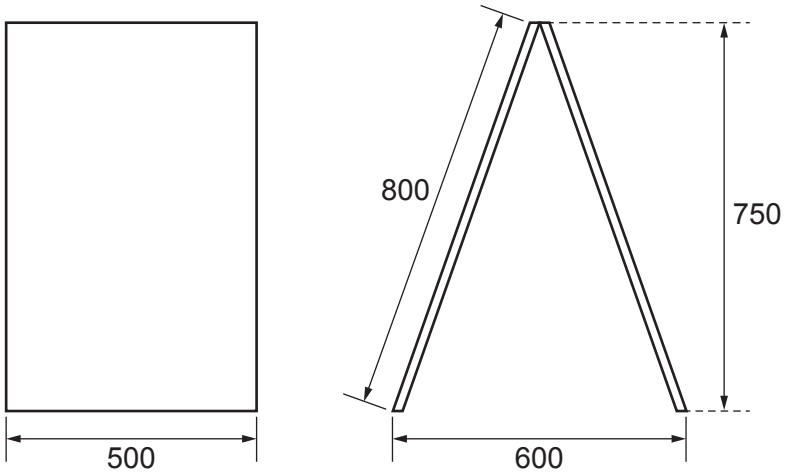

Front view Side view

Complete the isometric drawing of the display board.
The starting point has been drawn for you.
The grid points are 5 mm apart. Use the scale 1:10.

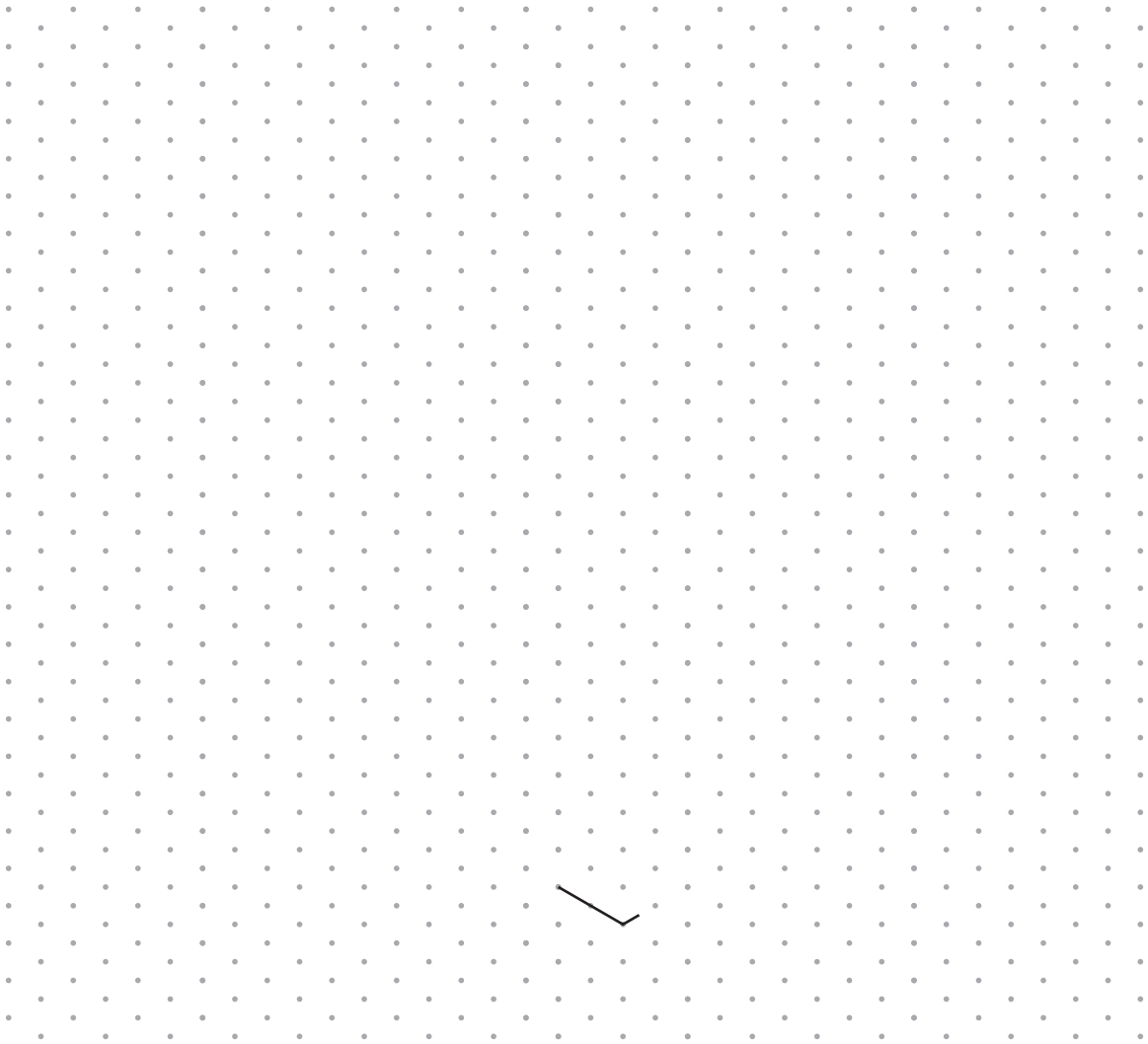

[4]

© OCR 2025

(c) The display board stands forming an isosceles triangle when in use.

Calculate angle **a**.

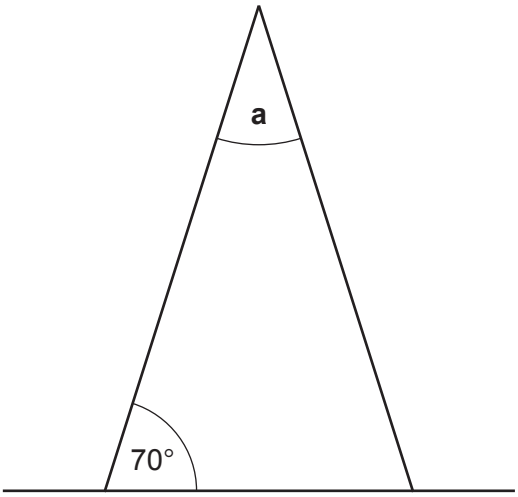

Not to scale

Angle **a** ..... ° **[2]**

© OCR 2025

(d) Information showing the quantities of different types of litter is shown below.

Litter type	**Number of items**	**Percentage of items**
Plastic	240	
Papers and cardboard	72	
Plastic packaging	120	
Glass	48	10%
Total number of items (all types)	**480**	**100%**

(i) Complete the table. **[1]**

(ii) Present the information from the table as a pie chart. Include labels.

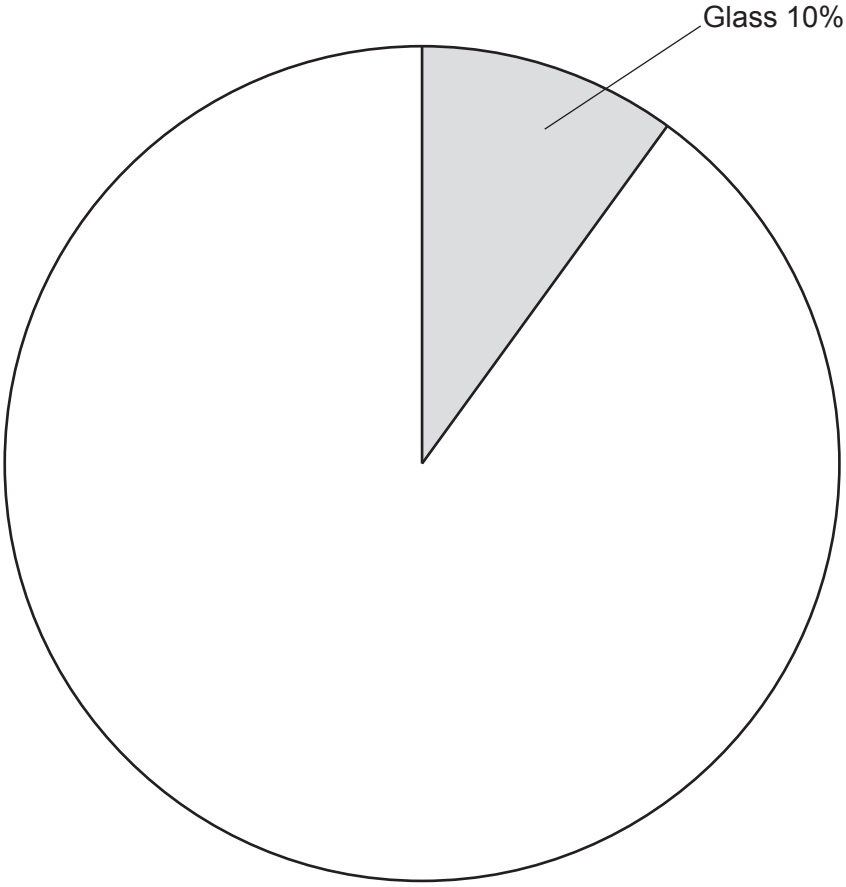

[3]

© OCR 2025

(e) A litter picker can be used to pick up rubbish. It is designed for use by adults.

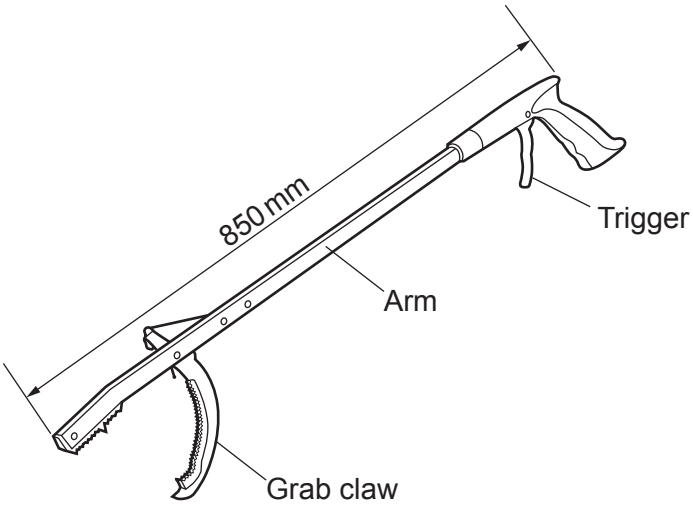

The manufacturer wants to produce litter pickers that can be used by children.

(i) The length of the arm on the adult sized litter picker needs to be reduced by 250 mm.

Calculate the length of material needed to make arms for a batch of 30 child-sized litter pickers.

Give your answer in **metres**.

Length ..... m **[3]**

© OCR 2025

(ii) The material for the arms is supplied in lengths of 3 m.

Calculate the number of 3 m lengths required to manufacture the batch of 30 child-sized litter pickers.

Number of lengths ..... **[1]**

(iii) One 3 m length of material costs the manufacturer £9.75.

Calculate the cost of buying the material needed for 30 child-sized litter pickers.

Cost £ ..... **[1]**

(f) The cord in the litter picker moves through a pulley mechanism when the trigger is pulled.

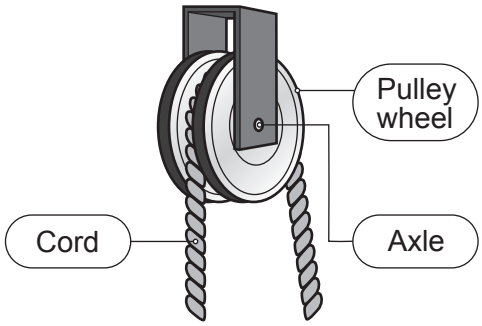

Describe the function of a pulley mechanism.

.....

.....

..... **[2]**

© OCR 2025

3 An electric toothbrush is shown below.

The electric toothbrush is rechargeable and provides a back-and-forth brushing motion to clean teeth.

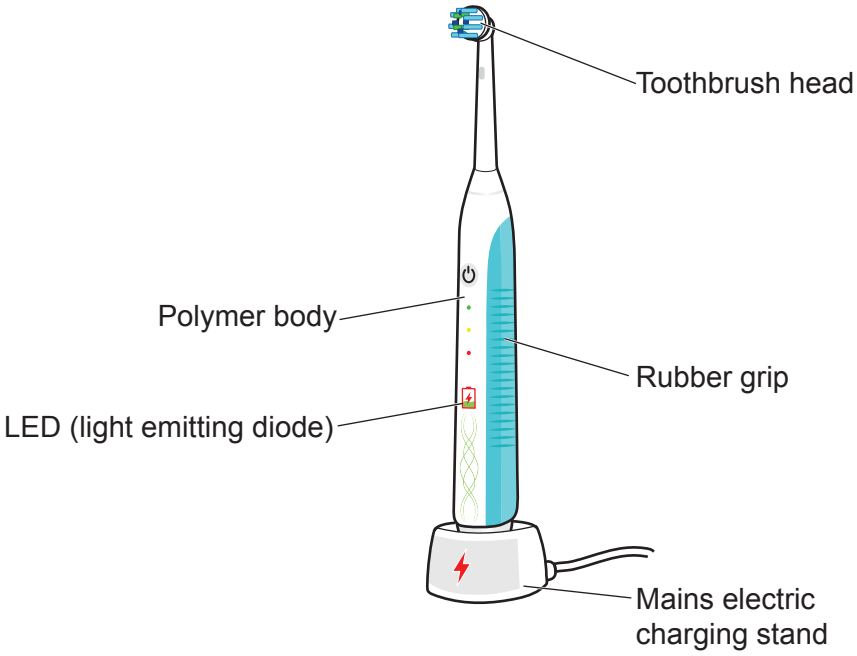

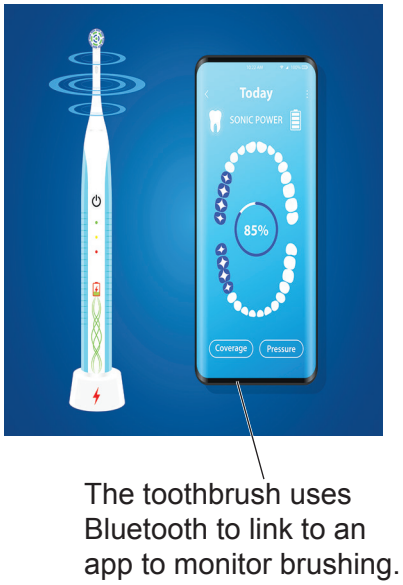

(a) The crank and slider linkage shown below is used in the toothbrush to transfer motion.

Complete the labels to show the types of motion shown.

The slider uses ..... motion.	The crank uses ..... motion.

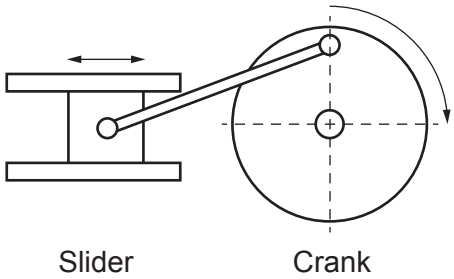

[2]

(b) The toothbrush has an LED (light emitting diode) which indicates when the battery is being charged by outputting light.

Identify **one** other electronic component that creates an output.

..... **[1]**

© OCR 2025

(c) The toothbrush has a replaceable head which extends the life of the toothbrush.

Explain **two** other ways the toothbrush could be improved to be more sustainable.

1 .....

.....

.....

2 .....

.....

.....

[4]

(d) Many companies are using emerging technologies such as Bluetooth and apps to improve consumer products such as the electric toothbrush.

(i) Describe **one** other example of an emerging technology that is used to improve the functionality of a specific consumer product.

.....

..... **[2]**

(ii) Give **two** reasons why it is important that designers and manufacturers make use of emerging technologies in products.

1 .....

.....

2 .....

.....

[2]

© OCR 2025

(e) Discuss the importance of designers considering inclusive design when designing and developing consumer products such as the electric toothbrush.

To support your answer refer to products that you are familiar with.

.....

.....

.....

.....

.....

.....

.....

.....

.....

.....

.....

.....

.....

.....

.....

.....

.....

.....

.....

..... **[6]**

© OCR 2025

SECTION B

Use the **Insert** to answer **all** the questions in Section B.
The **Insert** has images and information about products that are used when travelling and commuting.

4 Refer to **page 8** of the Insert.

(a)
(i) **Image A** shows some travel tickets.

Explain **one** reason why card is a suitable material for travel tickets.

.....

..... **[1]**

(ii) Identify with a tick (✓) the most suitable weight for a travel ticket made from card.

Weight	Tick (✓) one only
50 gsm	
80 gsm	
220 gsm	
480 gsm	

[1]

(b) **Image B** show a luggage trolley.

The material used for the body of the luggage trolley is aluminium alloy.

(i) What is an alloy?

..... **[1]**

(ii) Describe **two** properties of aluminium alloy that make it a suitable material for the body of a luggage trolley.

1 .....

2 .....

[2]

(iii) The luggage trolley is designed to be ergonomic.

Explain **one** ergonomic feature of the luggage trolley.

.....

..... **[2]**

© OCR 2025

(c) **Image C** shows a wooden food container.

Wooden food containers are a popular choice for consumers.

(i) Give **one** reason why wooden food containers are popular.

.....

..... **[1]**

(ii) The wooden food container is made from a softwood.

Identify **two** softwoods.

1 .....

2 .....
[2]

© OCR 2025

You need to answer questions **5** and **6** in relation to **one** of the products listed below covering an area you have studied in depth.

Information about the products is in the **Insert**.

Before you choose a product, read all parts of questions **5** and **6**.

You **must** tick **one** box below to indicate your chosen product.

☐ **Product 1:** Banner signage – (papers and boards)

☐ **Product 2:** Travel pillow – (fibres and fabrics)

☐ **Product 3:** Bicycle light – (design engineering)

☐ **Product 4:** Bicycle helmet – (polymers)

☐ **Product 5**: Children's scooter – (metals)

☐ **Product 6:** Modular seating – (timbers)

© OCR 2025

5 Study and use the images and information about your chosen product given in the **Insert**.

(a) Describe **two** working properties of one of the materials used in your chosen product and how this property makes it suitable for the product.

Name of material: .....

1 .....

.....

2 .....

.....

[4]

(b) Material properties are an important consideration when selecting materials for a new product.

Give **two** other considerations when selecting a material for a new product.

1 .....

.....

2 .....

.....

[2]

(c) Explain **two** aspects of the design of your chosen product that ensures it has good structural integrity.

1 .....

.....

2 .....

.....

[2]

© OCR 2025

(d) Describe the main steps you would take to make a prototype of your chosen product in the **school workshop** that could be presented to stakeholders.

You should include: wastage, addition, forming and deforming and digital technology as appropriate.

You can use sketches and notes to support your answer. **[6]**

© OCR 2025

(e) Study and use the images and technical information about your chosen product given on the Insert. Produce a step-by-step plan to explain the stages that would be taken if the chosen product was made **commercially**.

You must include details of:

- why the process/ processes are suitable
- details of materials, tools, moulds and components that would be used
- wasting, moulding, forming, assembly and finishing
- any digital technology used as appropriate.

You can use sketches and notes to support your answer. **[9]**

© OCR 2025

© OCR 2025

6 Lifecycle assessments (LCA) are completed to ensure products are sustainable and minimise their environmental impact.

(a)* Complete a lifecycle assessment (LCA) of your chosen product.

Discuss all stages from raw material to disposal.

.....

.....

.....

.....

.....

.....

.....

.....

.....

.....

.....

.....

.....

.....

.....

.....

.....

.....

.....

.....

..... **[8]**

© OCR 2025

(b) Describe **two** changes that could be made to the design or manufacture of your chosen product that could reduce its environmental impact.

1 .....

.....

.....

.....

2 .....

.....

.....

.....

[4]

END OF QUESTION PAPER

© OCR 2025

EXTRA ANSWER SPACE

If you need extra space use these lined pages. You must write the question numbers clearly in the margin.

© OCR 2025

OCR
Oxford Cambridge and RSA

Copyright Information

OCR is committed to seeking permission to reproduce all third-party content that it uses in its assessment materials. OCR has attempted to identify and contact all copyright holders whose work is used in this paper. To avoid the issue of disclosure of answer-related information to candidates, all copyright acknowledgements are reproduced in the OCR Copyright Acknowledgements Booklet. This is produced for each series of examinations and is freely available to download from our public website (www.ocr.org.uk) after the live examination series.

If OCR has unwittingly failed to correctly acknowledge or clear any third-party content in this assessment material, OCR will be happy to correct its mistake at the earliest possible opportunity.

For queries or further information please contact The OCR Copyright Team, The Triangle Building, Shaftesbury Road, Cambridge CB2 8EA.

OCR is part of Cambridge University Press & Assessment, which is itself a department of the University of Cambridge.

© OCR 2025